RevNo	Revision note	Date	Signature	Checked

Hydraulic scheme

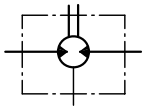

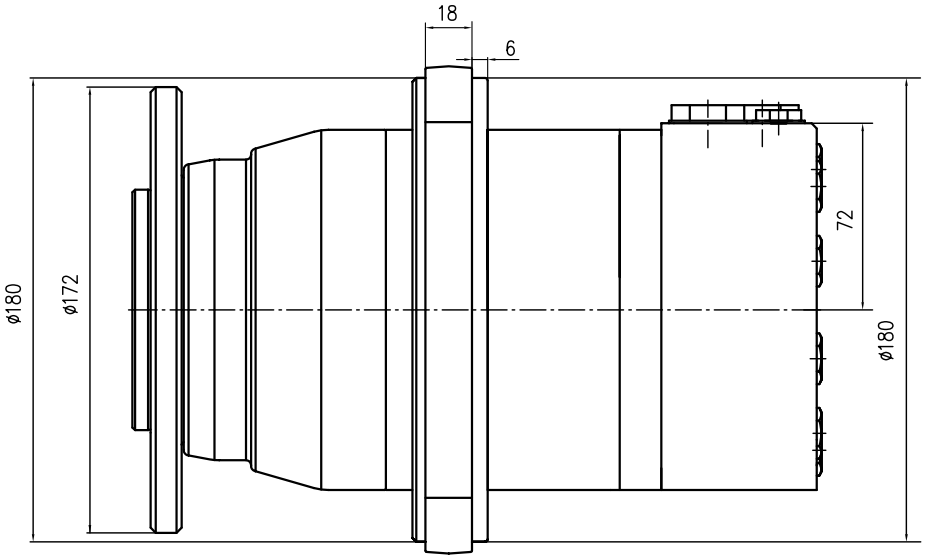

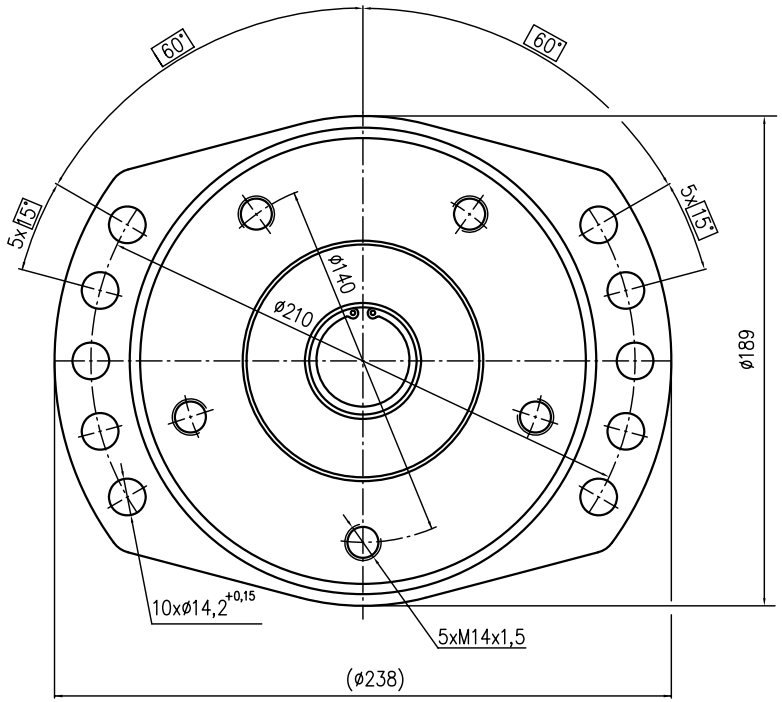

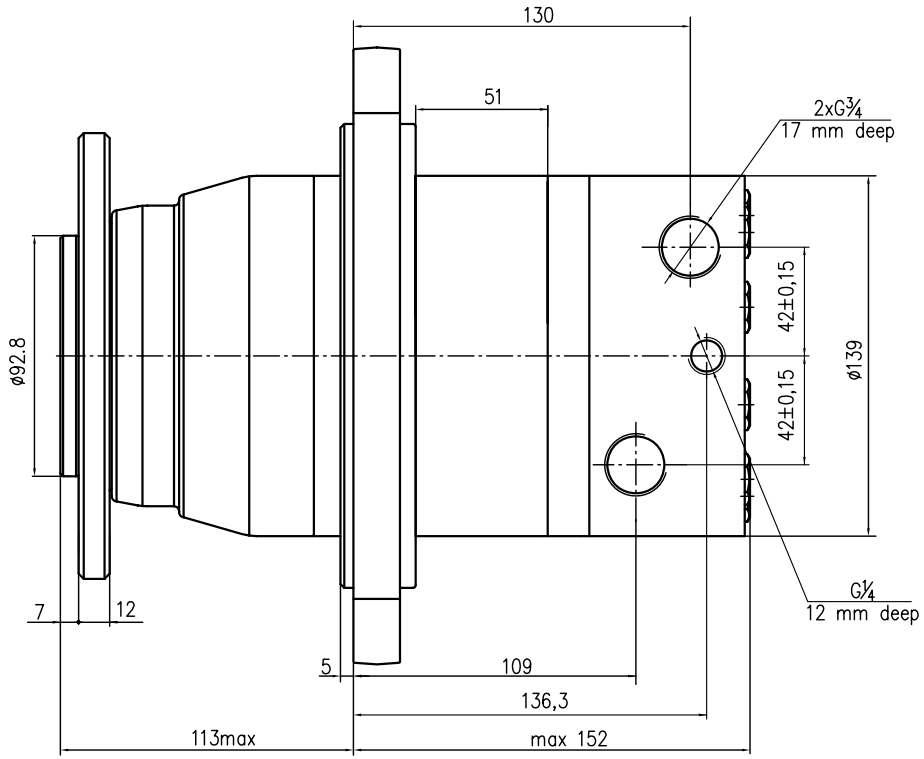

TECHNICAL DATA

Type		TMF400
Displacement, [cm³/rev.]		410,9
Max. Speed, [RPM]	Cont. Int.	305 365
Max. Torque, [daNm]	Cont. Int.	147 206
Max. Pressure Drop, [bar]	Cont. Int.	250 350
Max. Oil Flow, [lpm]	Cont. Int.	125 150
Max. Inlet Pressure, [bar]	Cont. Int.	270 370
Weight, [kg]		29

Note: Motor must always have a drain line.

Itemref	Quantity	Title/Name, designation, material, dimension etc		Article No./Reference
Material	Weight	Designed by Zagorova		Date 13.04.2010 / Scale 1:1
AMS HYDRAULIC		Hydraulic motor type TMF 400		Rev. 0 / Sheet 1